DATA SHEET

T 5824 EN

Type 5824 Electric Actuator without fail-safe action
Type 5825 Electric Actuator with fail-safe action

Application

Electric actuators designed for valves used in heating, ventilation and air-conditioning systems as well as in process engineering and industrial energy transfer systems.

Special features

The linear actuators are particularly suitable for attachment to SAMSON Types 3260, 3222, 3226, 3213, 3214 and V2001 Valves. In addition, they can be used as additional electric actuators on self-operated differential pressure and flow regulators.

- Type 5824 Actuator without fail-safe action and Type 5825 with fail-safe action
- Motor switched off by torque-dependent limit switches
- Type 5824 with manual override (handwheel)
- No maintenance
- Testing according to DIN EN 14597
  - The Type 5825 Electric Actuator with fail-safe action "actuator stem extends" is tested by the German technical surveillance association TÜV according to DIN EN 14597 in combination with different SAMSON valves. Tested versions are indicated on the nameplate. They are listed in the Technical data table. The registration number is available on request.

Versions

- Three-step version
  - Synchronous motor with maintenance-free gearing
- Digital positioner
  - Stepper motor with maintenance-free gearing
  - Adjustment of the direction of action at the actuator
  - Start-up at the actuator
  - Settings made using the TROVIS-VIEW software

Options

- Faster motor
  - Double stroking speed possible (three-step version)
- Limit contacts
  - Two adjustable mechanical changeover switches
- Resistance transmitters
  - One resistance transmitter with a resistance range from 0 to 1000 Ω

Fig. 1: *Type 5824-10 Electric Actuator*

Table 1: *Actuator versions*

Type	Valve attachment	Rated travel	Optional version with digital positioner
Versions without fail-safe action			
5824-10	Force-locking	6 (7.5) mm	Yes
5824-13	Force-locking	6 (7.5) mm	No
5824-20	Force-locking	12 mm	Yes
5824-23	Force-locking	12 mm	No
5824-30	Form-fit	15 mm	Yes
5824-33	Form-fit	15 mm	No
Versions with fail-safe action: "Actuator stem extends" or "Actuator stem retracts"			
5825-10/-15	Force-locking	6 (7.5) mm	Yes
5825-13/—	Force-locking	6 (7.5) mm	No
5825-20/-25	Force-locking	12 mm	Yes
5825-23/—	Force-locking	12 mm	No
5825-30/-35	Form-fit	15 mm	Yes
5825-33/—	Form-fit	15 mm	No

Design and principle of operation

Refer to Fig. 2.

The actuators are mounted directly onto valves with force-locking connection with an M32x1.5 (width across flats 36). When the actuator stem extends, the actuator piston pushes against the valve's plug stem. When the actuator stem retracts, the plug stem is supported by a spring in the valve.

Valves with form-fit connection do not have a return spring. A yoke or adapter (see Table 6 for accessories) is used to connect them to the actuator. The plug stem is moved by the actuator in both directions.

– **Type 5824**

  The actuator without fail-safe action has a handwheel (2) used to manually position the valve. Travel and direction of action can be read off the travel indication scale (9).

– **Type 5825**

  The electric actuator with fail-safe action largely corresponds to the Type 5824 described above. However, it contains a spring assembly (8) and an electromagnet, which move the connected valve to its fail-safe position when de-energized.
  A handwheel (2) is not used. After the actuator is switched off and the front cover (1.1) removed, manual adjustment with an Allen key is possible. As soon as the Allen key is released, the actuator immediately moves back to its original position.

  – **Actuator stem extends**

    Upon supply voltage failure, the actuator stem extends.

  – **Actuator stem retracts**

    Upon supply voltage failure, the actuator stem retracts.

– **Version with faster motor (three-step version)**

  The Types 5824-13/-23/-33 and Types 5825-13/-23/-33 are equipped with a faster motor in a housing attached to the back of the actuator.

– **Limit contacts**

  Optionally, the actuators can be equipped with two limit contacts, which are actuated by continuously adjustable cam disks. Optionally, the actuators can be equipped with two limit contacts, which are actuated by continuously adjustable cam disks.
  The actuator with positioner is only available with limit contacts in the version for 24 V AC/DC supply voltage. The two additional limit contacts are not suitable for retrofitting.

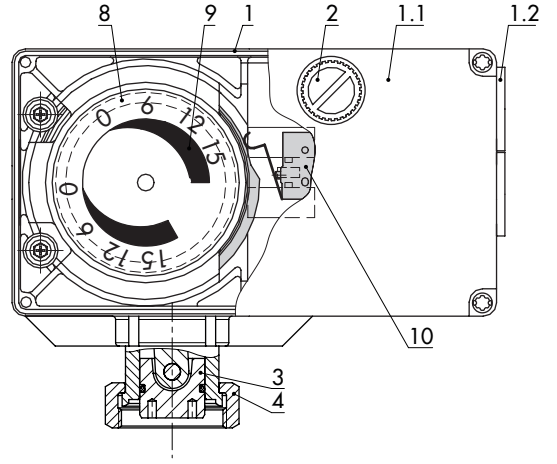

1	Housing	4	Coupling nut M32x1.5
1.1	Front cover	8	Spring assembly (Type 5825)
1.2	Cable entry		
2	Handwheel (Type 5824)	9	Travel indication scale
3	Actuator stem with actuator piston	10	Limit contacts

Fig. 2: *Design of Type 5824 and Type 5825 (force-locking attachment)*

– **Resistance transmitters (three-step versions)**

  The resistance transmitter is linked to the gear and produces a resistance signal between approx. 0 and 1000 Ω (usable range approx. 0 to 900 Ω) proportional to the valve travel. This version is always fitted with limit contacts as well.

– **Version with digital positioner**

  The positioner ensures a predetermined assignment of the valve position to the input signal.
  For position feedback, a 0 to 10 V signal can be picked off at terminals 32 and 33. The version with positioner allows the characteristic to be reversed and is suitable for split-range operation.

  – Direction of action reversed by slide switch
  – Momentary actuator travel calculated from transit time
  – Operating status and errors indicated by LEDs
  – Adjustable stroking speeds
  – Blocking protection
  – Adjustable input and output signal ranges
  – Configuration, parameterization, diagnostic function and online connection for monitoring using the TROVIS-VIEW software
  – Direct data transmission using a connecting cable (direct connection to computer)
  – Data transmission over a memory pen

Settings

The digital positioner settings can be changed in the TROVIS-VIEW software.

Table 2: *TROVIS-VIEW settings*

Configuration	Default setting	Adjustment range
Input variable		
Lower range value	0 V 0 mA	0 to 7.5 V 0 to 15 mA
Upper range value	10 V 20 mA	2.5 to 10 V 5 to 20 mA
Unit	V	V/mA
Position feedback signal		
Lower range value	0.0 V	0.0 to 10.0 V
Upper range value	10.0 V	0.0 to 10.0 V
Input signal		
Detect input signal failure	No	Yes/No
Positioning value upon input signal failure	Internal	Internal/Last position
Internal positioning value	0.0 %	0.0 to 100.0 %
End position guiding when the value falls below the limit	1.0 %	0.0 to 49.9 %
End position guiding when the value exceeds the limit	97.0 %	50.0 to 100.0 %
Functions		
Blocking protection of valve	No	Yes/No
Valve travel		
Travel	100.0 %	30.0 to 130.0 %
Travel adjustment	Absolute	Absolute/Relative
Speed level	Standard	Slow/Standard/Fast
Dead band (switching range)	2.0 %	0.5 to 5.0 %
Characteristic	Linear	Linear/equal percentage/reverse equal percentage/user-defined

Table 3: *Replacement of old actuators with new actuators (valve remains unchanged)*

Old actuator		New actuator	
Type	5821-5	Type	**5824-10**
	5821-6		**5824-10**
Type	5822-50	Type	**5825-10**
	5822-60		**5825-10**
	5822-70		**5825-10**
Type	5825-11	Type	**5825-10** [1]

[1] Double stroking speed

There is no replacement for Types 582x-1, 582x-2, 582x-3 and 5822-4 Actuators. Valve **and** actuator must be replaced. In this case, the actuator must be selected to fit the new valve.

Three-step version

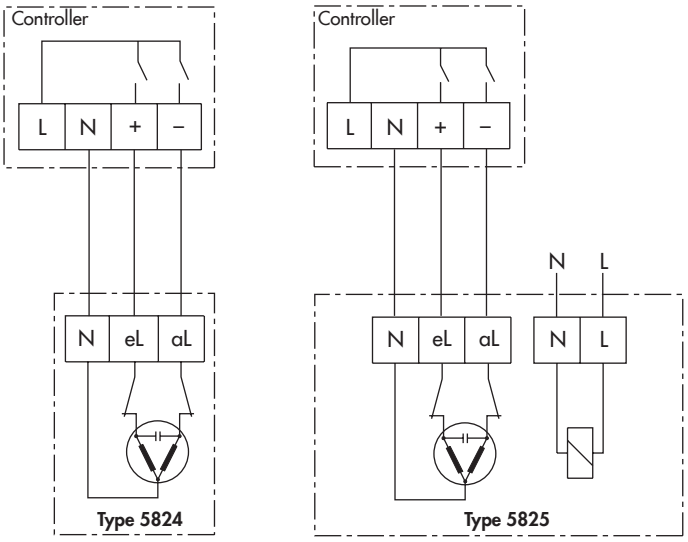

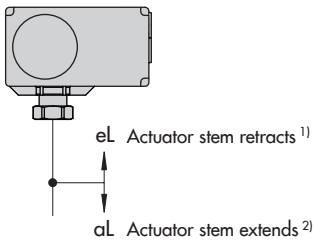

Additional electrical equipment

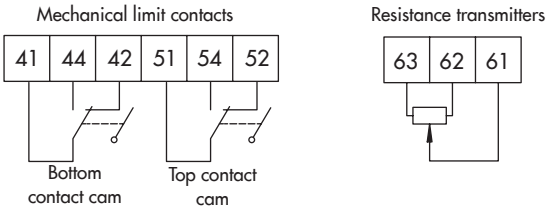

1) Corresponds with terminal L2 in Types 5821/5822
2) Corresponds with terminal L1 in Types 5821/5822

Version with digital positioner

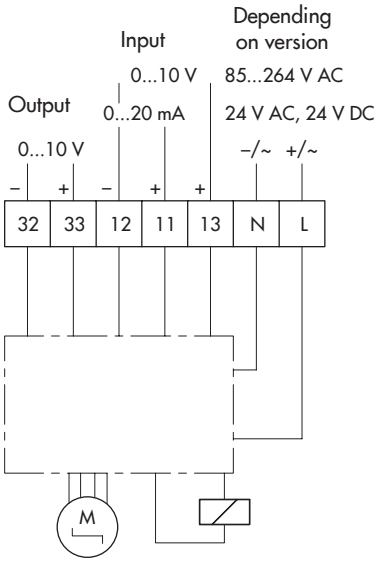

Additional electrical equipment

Mechanical limit contacts (24 V version only)

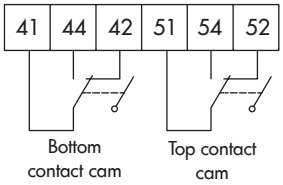

Fig. 3: *Electrical connection*

Table 4: *Technical data · Three-step version*

Three-step version	Type	5824						5825								
		-10	-13	-20	-23	-30	-33	-10	-13	-20	-23	-30	-33	-15	-25	-35
Fail-safe action		Without						Extends						Retracts		
Rated travel	mm	6 [1]	6 [1]	12	12	15	15	6 [1]	6 [1]	12	12	15	15	6 [1]	12	15
Stroking speed	Standard: 0.18 mm/s	•	–	•	–	•	–	•	–	•	–	•	–	•	•	•
	Actuator with faster motor: 0.36 mm/s	–	•	–	•	–	•	–	•	–	•	–	•	–	–	–
Transit time for rated travel	approx. s	35 [1]	18 [1]	70	36	90	45	35 [1]	18 [1]	70	36	90	45	35 [1]	70	90
Transit time for fail-safe action	approx. s	–	–	–	–	–	–	4	4	6	6	7	7	4	6	7
Thrust	Extends N	700	700	700	700	700	700	500	500	500	500	280	280	500	500	280
	Retracts N	–	–	–	–	700	700	–	–	–	–	280	280	–	–	280
Nominal thrust of safety spring	N	–	–	–	–	–	–	500	500	500	500	280	280	– [2]	– [2]	280
Attachment	Force-locking	•	•	•	•	–	–	•	•	•	•	–	–	•	•	–
	Form-fit	–	–	–	–	•	•	–	–	–	–	•	•	–	–	•
Manual adjuster		Yes						Possible [3]								
Supply voltage																
24 V, 50 Hz		•	–	•	–	•	–	•	–	•	–	•	–	•	•	•
230 V, 50 Hz/60 Hz [4]		•	•	•	•	•	•	•	•	•	•	•	•	•	•	•
Power consumption	Approx. VA	3	6	3	6	3	6	4	8	4	8	4	8	4	4	4
Permissible temperatures [5]																
Ambient		0 to 50 °C														
Storage		–20 to +70 °C														
Security																
Degree of protection		IP 54 according to EN 60529 [6]														
Class of protection		II according to EN 61140														
Device safety		According to EN 61010-1														
Noise immunity		According to EN 61000-6-2 and EN 61326-1														
Noise emission		According to EN 61000-6-3 and EN 61326-1														
Vibration		According to EN 60068-2-6 and EN 60068-2-27														
Conformity		CE · EAC														
Testing according to DIN EN 14597		–	–	–	–	–	–	DIN Geprüft				–	–	–	–	–
Additional electrical equipment (not suitable for retrofitting)																
Two limit contacts max. 230 V, 1 A		•	•	•	•	•	•	•	•	•	•	•	•	•	•	•
One resistance transmitter, 0 to 1000 Ω ±15 % (90 % of final value at rated travel); max. 200 mW		•	–	•	–	•	•	•	–	•	–	•	•	•	•	•
Materials																
Housing, housing cover		Plastic (PPO with glass fiber reinforcement)														
Coupling nut M32x1.5		Brass														
Weight	kg (approx.)	0.75	1.00	0.75	1.00	0.75	0.75	1.00	1.25	1.00	1.25	1.00	1.25	1.00	1.00	1.00

1) Actuators with 6 mm travel can also be used for valves with 7.5 mm travel (45 s transit time, 22.5 s with faster motors)
2) The safety spring pulls actuator stem to the retracted end position; the valve operated by the valve spring.
3) Manual override using 4 mm Allen key (after removing the cover); actuator always returns to fail-safe position after release
4) Special version
5) The permissible medium temperature depends on the valve on which the electric actuator is mounted.
The limits in the valve documentation apply.
6) The degree of protection IP 54 can only be achieved up to device index .03 when the actuator is installed in the upright position. See last two figures of the configuration ID written on the nameplate, e.g. Var.-ID xxxxxxx.xx, for the device index.

Table 5: *Technical data · Actuator with digital positioner*

Actuators with digital positioner		**Type**	**5824**			**5825**					
			-10	**-20**	**-30**	**-10**	**-20**	**-30**	**-15**	**-25**	**-35**
Fail-safe action			Without			Extends			Retracts		
Rated travel		mm	6 [1]	12	15	6 [1]	12	15	6 [1]	12	15
Stroking speed [2]	Slow	mm/s	0.13	0.13	0.13	0.13	0.13	0.13	0.13	0.13	0.13
	Standard	mm/s	**0.2**	**0.2**	**0.2**	**0.2**	**0.2**	**0.2**	**0.2**	**0.2**	**0.2**
	Fast	mm/s	0.36	0.36	0.36	0.36	0.36	0.36	0.36	0.36	0.36
Transit time for rated travel (depending on the stroking speed)	Slow	approx. s	45	89	111	45	89	111	45	89	111
	Standard	approx. s	**31**	**61**	**76**	**31**	**61**	**76**	**31**	**61**	**76**
	Fast	approx. s	17	33	41	17	33	41	17	33	41
Transit time for fail-safe action		s	–	–	–	4	6	7	4	6	7
Thrust	Extends	N	700	700	700	500	500	280	500	500	280
	Retracts	N	–	–	700	–	–	280	–	–	280
Nominal thrust of safety spring		N	–	–	–	500	500	280	– [3]	– [3]	280
Attachment	Force-locking		•	•	–	•	•	–	•	•	–
	Form-fit		–	–	•	–	–	•	–	–	•
Manual override			Yes			Possible [4]					
Supply voltage											
24 V DC (–10 %, + 20 %) [5], 24 V, 50 and 60 Hz			•	•	•	•	•	•	•	•	•
85 to 264 V, 50 and 60 Hz			•	•	•	•	•	•	•	•	•
Input signal			0 to 10 V, R_i = 20 kΩ · 0 to 20 mA, R_i = 50 Ω								
Output signal			0 to 10 V, R_B = 1 kΩ								
Power consumption [6]											
24 V DC (–10 %, 20 %)		W	5			8					
24 V, 50 and 60 Hz		VA	5			8					
85 to 264 V, 50 and 60 Hz		VA	8			10					
Permissible temperatures [7]											
Ambient			0 to 50 °C								
Storage			–20 to +70 °C								
Security											
Degree of protection			IP 54 according to EN 60529 [8]								
Class of protection			II according to EN 61140								
Device safety			According to EN 61010-1								
Noise immunity			According to EN 61000-6-2 and EN 61326								
Noise emission			According to EN 61000-6-3 and EN 61326								
Vibration			According to EN 60068-2-6 and EN 60068-2-27								
Compliance			CE · EAC								
Testing according to DIN EN 14597			–	–	–	DIN Geprüft		–	–	–	–
Additional electrical equipment (not suitable for retrofitting)											
Two limit contacts [9], max. 230 V, 1 A			•			•					
Materials											
Housing, housing cover			Plastic (PPO with glass fiber reinforcement)								
Coupling nut M32x1.5			Brass								
Weight		kg (approx.)	0.75			1.00					

1) Actuators with 6 mm travel can also be used for valves with 7.5 mm travel.
2) Adjustable (default settings in bold print)
3) The safety spring pulls actuator stem to the retracted end position; the valve operated by the valve spring.
4) Manual override using 4 mm Allen key (after removing the cover); actuator always returns to fail-safe position after release
5) When a fast stroking speed and 24 V DC supply voltage are used, make sure the voltage does not fall below the specified value.
6) With standard speed level
7) The permissible medium temperature depends on the valve on which the electric actuator is mounted.
The limits in the valve documentation apply.
8) The degree of protection IP 54 can only be achieved up to device index .03 when the actuator is installed in the upright position. See last two figures of the configuration ID written on the nameplate, e.g. Var.-ID xxxxxxx.xx, for the device index.
9) Actuators for 85 to 264 V supply voltage cannot be fitted with limit contacts.

Types 5824-10/-20 and Types 5825-10/-15/-20/-25

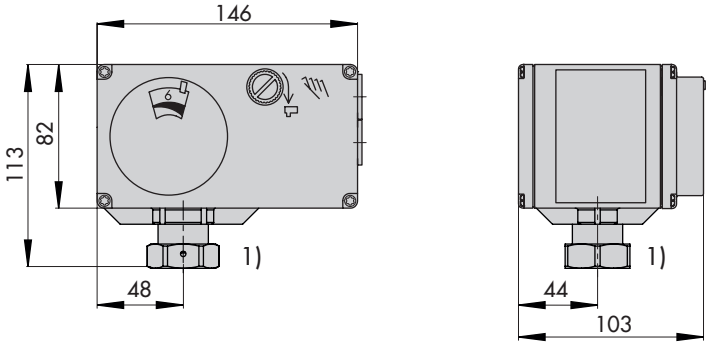

Types 5824-13/-23/-33 and Types 5825-13/-23/-33 (version with faster motor)

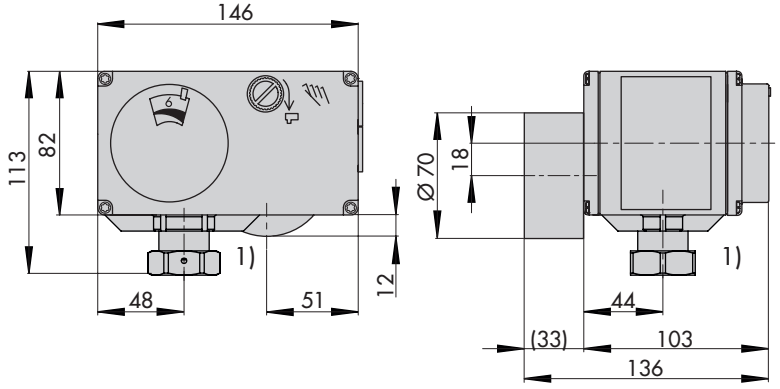

Type 5824-30 and Types 5825-30/-33/-35

Actuator without yoke

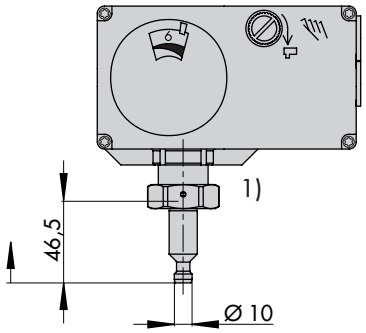

15 mm travel

Type 5824-30

Actuator with yoke (1400-7414)

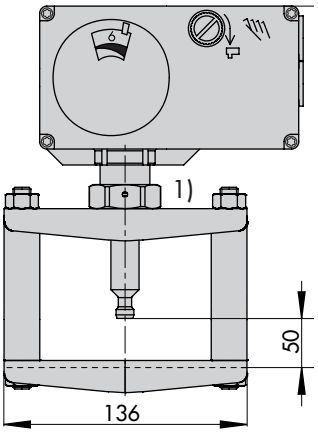

15 mm travel

Mounting orientation

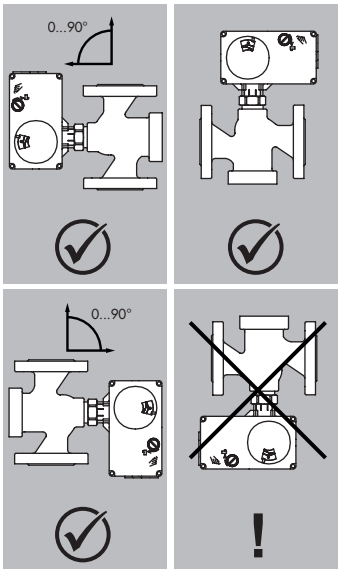

1) M32x1.5 nut (width across flats 36)

Fig. 4: *Dimensions in mm and mounting position*

Table 6: *Accessories*

For version with digital positioner	Ordering number
Hardware package consisting of: – Memory pen-64 – Connecting cable – Modular adapter	1400-9998
Memory pen-64	1400-9753
Connecting cable RJ-12/D-sub, 9 pin	1400-7699
Modular adapter D-sub 9-pin/RJ-12 for memory pen	1400-7698
USB to RS232 adapter	8812-2001
Software	
TROVIS-VIEW (free of charge)	▶ www.samsongroup.com > Service & Support > Downloads > TROVIS-VIEW
For mounting on form-fit valves without return spring [1]	**Ordering number**
Yoke for Series V2001 Valves	1400-7414

[1] With Types 5824-30/-33 and Types 5825-30/-33/-35 Actuators

Ordering text

Type 5824-.../5825-... Electric Actuator

– Three-step version
  Supply voltage:
    230 V, 50 Hz
    230 V, 60 Hz (special version)
    24 V, 50 Hz
  Limit contacts: with/without
  Resistance transmitter: with/without

– Version with digital positioner
  Supply voltage:
    24 V, 50/60 Hz and DC
    85 to 264 V, 50 and 60 Hz
  Limit contacts: with/without [1]

  [1] 24 V version only

Associated mounting and operating instructions

– Types 5824 and 5825 (three-step version): ▶ **EB 5824-1**

– Types 5824 and 5825 (version with positioner): ▶ **EB 5824-2**